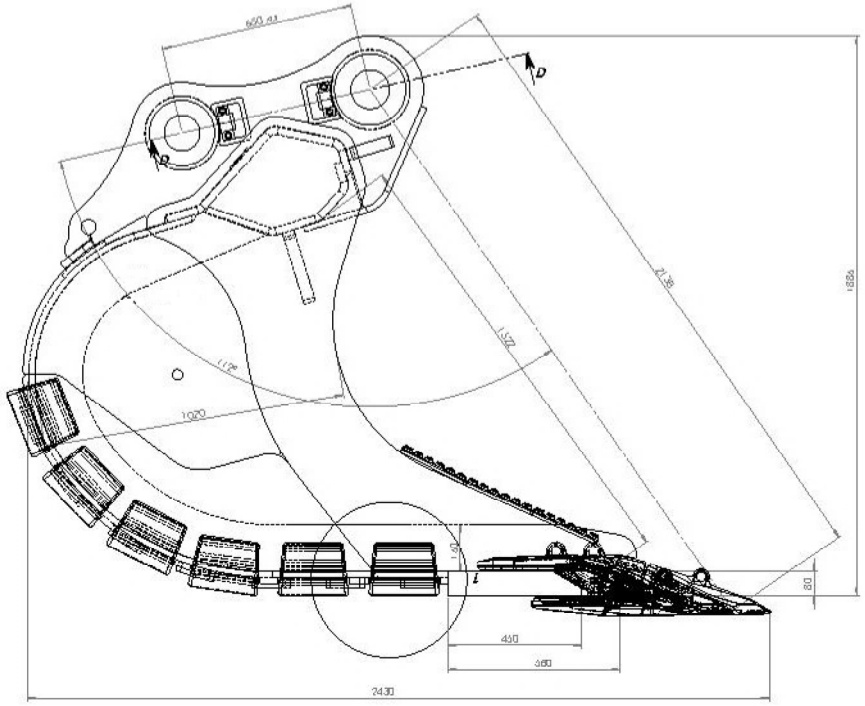

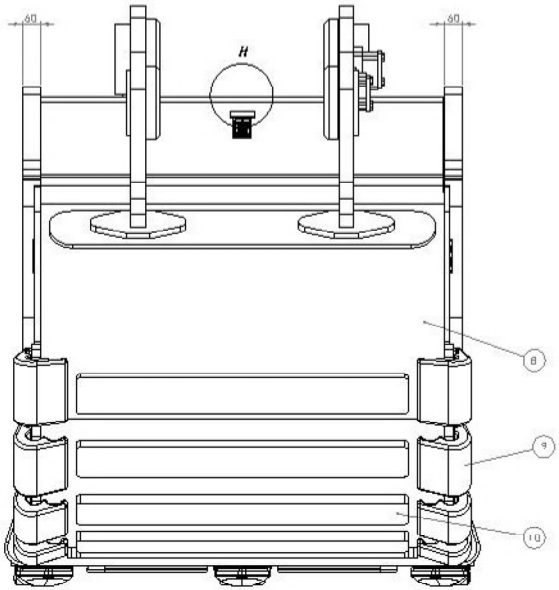

N.	Part.	Material	Thickness
1	edge V-delta	Hitut	80mm
2	Adapter Ultralok 38984-U60		
3	Point Ultralok U 60 C		
4	Edge Shroud Feunt FB 90		
5	Side-Front	Hardox 450	60 mm
6	Side-Upper	Hardox 450	20mm
7	Side-Lower	Hardox 450	30mm
8	Rolled Floor	Hardox 450	20mm
9	Cat's Heel Shroud Feunt PTO 200		
10	Horizontal Wearstrip	Hardox 450	35mm
11	Ripper Rib	Hardox 450/ Weldox 700	* 60mm
12	Futuro F 30 C8		

*3V Proposal nstead Hardox 450
(Same as EX 1900-EX 1200)

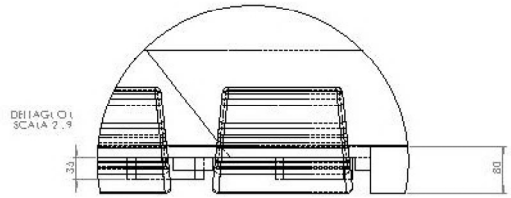

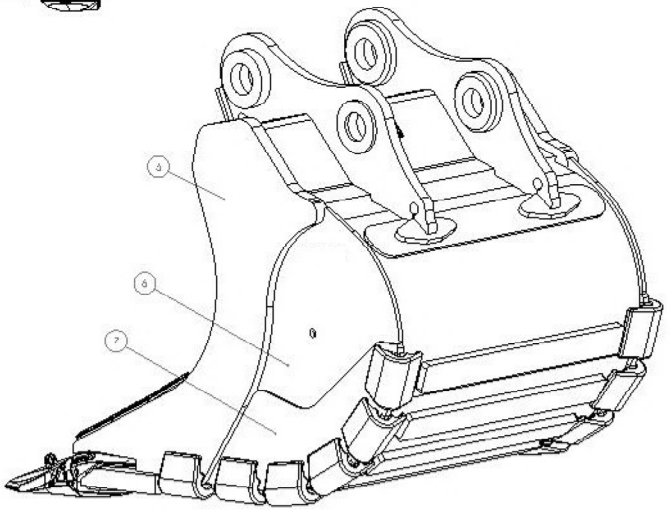

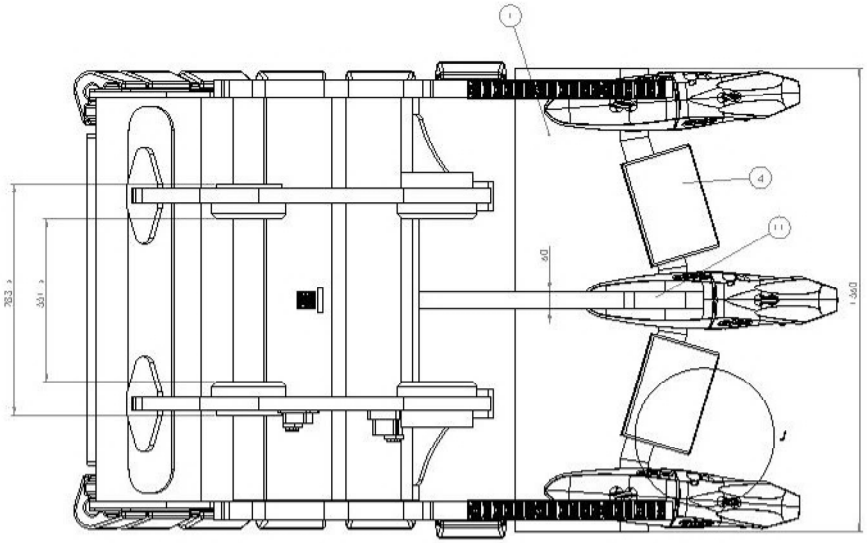

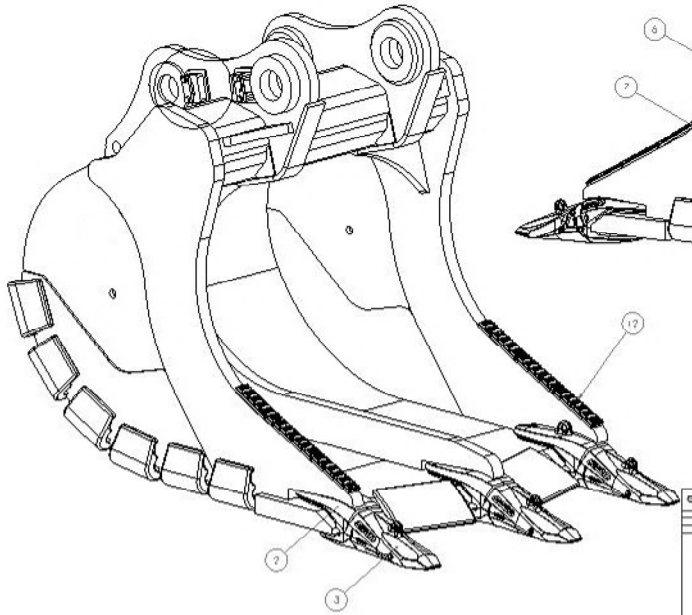

ONE-TP	Date 2004.03	Company Cooposto	
	Drawn	RIPPER BUCKET T 80L -1560_2.25m3_Denti Ultralok U60 C_W249 (Cat 365 C W3)	
	Approved		
	Date creation 08/10/2012		
	Scale 1:10		
		WBR085B156W248C00	